VIEW ON GOAL AREA
(From inside of Court)

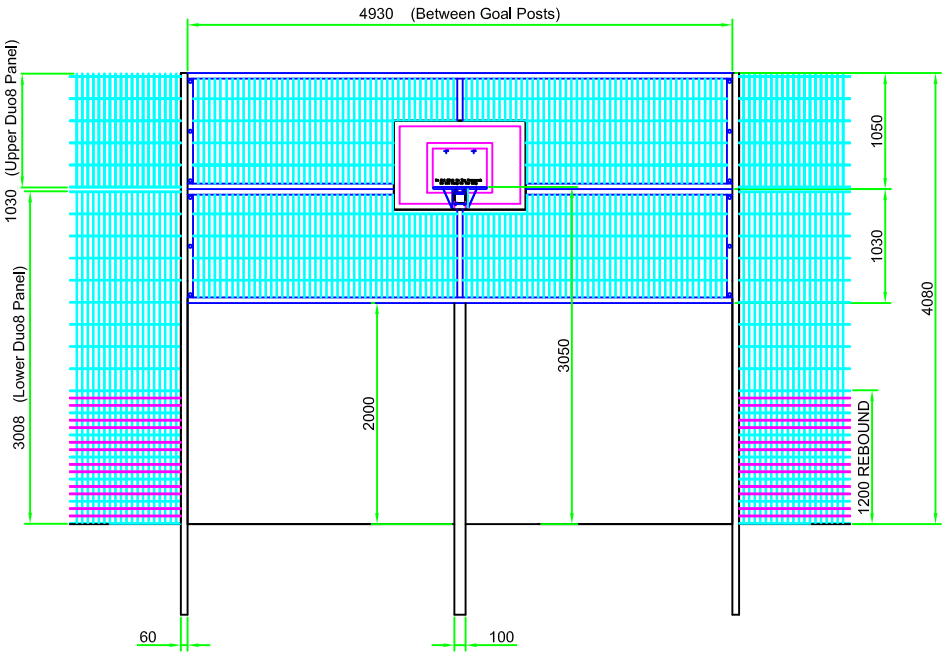

SIDE ELEVATION
ON RECESSED
GOAL AREA

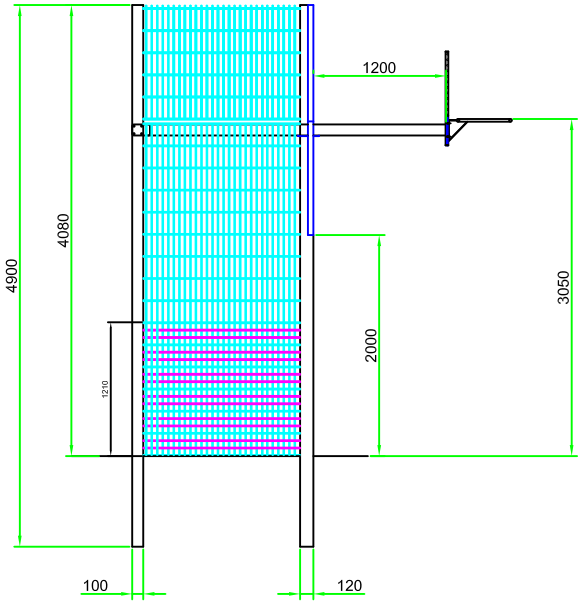

PLAN ELEVATION ON GOAL RECESS

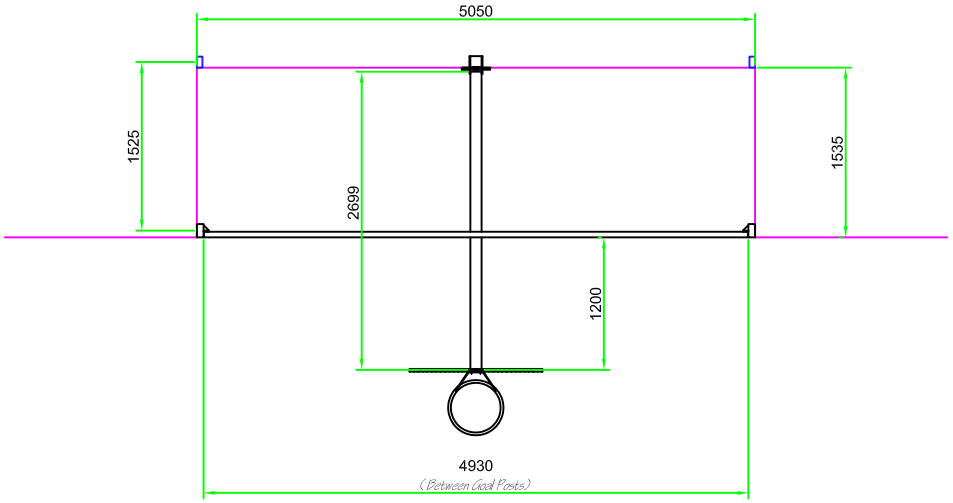

Recessed Goal with Over Panel

Fabricated By:	Date:	Checked By:	Date:

ZAUN

Design and Head Office: Steel Drive, Wolverhampton, WV10 0ED.

Email : sales_thomson@zaun.co.uk
: sales-midlands@zaun.co.uk

Tel : (01902) 786899
Fax : (01902) 790056 / 727377

CUSTOMER: XXXXXXXXXXXXXXX

SITE / JOB: XXXXXXXXX

DESCRIPTION: GOAL RECESS DETAIL

DRAWING NO: XXX / XX # GA1

SCALE: N/A

DATE: XX/XXXXX

DRAWN: XXXXX

REV: >

DO NOT SCALE

ALL DIMENSIONS TO BE CHECKED ON SITE BY THE CUSTOMER PRIOR TO PREPARING ANY DRAWINGS OR MANUFACTURING COMMENCING

DEVIATIONS FROM DRAWINGS MUST BE SUBMITTED TO US FOR APPROVAL PRIOR TO MANUFACTURE

DEVIATIONS FROM THE WORK CONTRACT SHOWN ON THE DRAWING MUST BE SUBMITTED TO US FOR PRICE AND ALL APPROVED COSTS ARE DEBITABLE TO THE CLIENT / WARRIOR BUILDER FOR CONSTRUCTION

THIS DRAWING IS COPYRIGHT AND NO PART OF IT MAY BE COPIED OR REPRODUCED WITHOUT THE CONSENT OF ZAUN LIMITED

REV	DETAILS	date	by	check by
[A]	-	-	-	-
[B]	-	-	-	-
[C]	-	-	-	-
[D]	-	-	-	-
[E]	-	-	-	-
[F]	-	-	-	-

FINISH: GALVANISED + PPC RAL XXXX XXXXX

DRAWING: GOA / 04A